LC-8500HR
EXERCISE BIKE

GE09-00033-XXXX

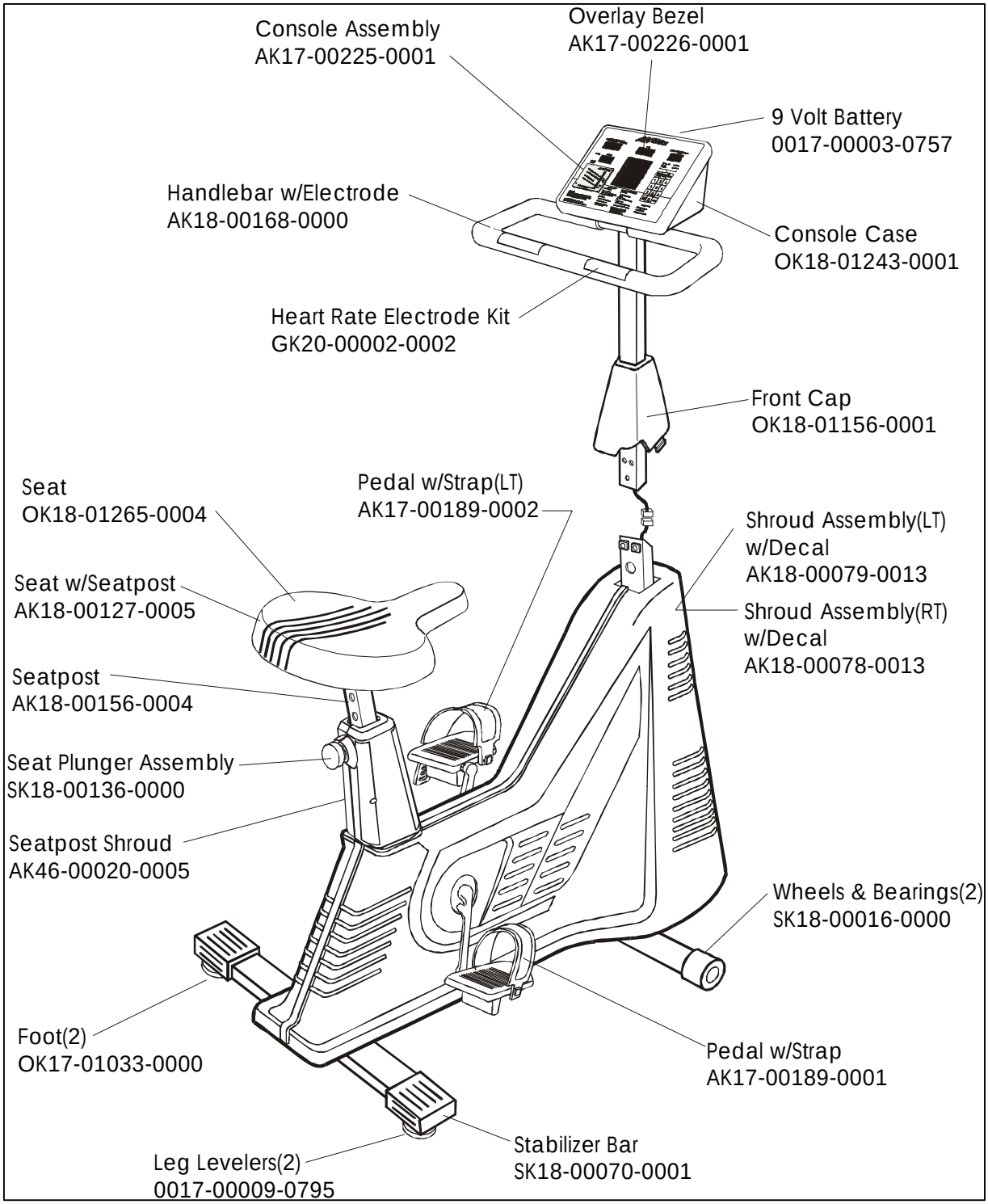

Revision Date: 11/12/98

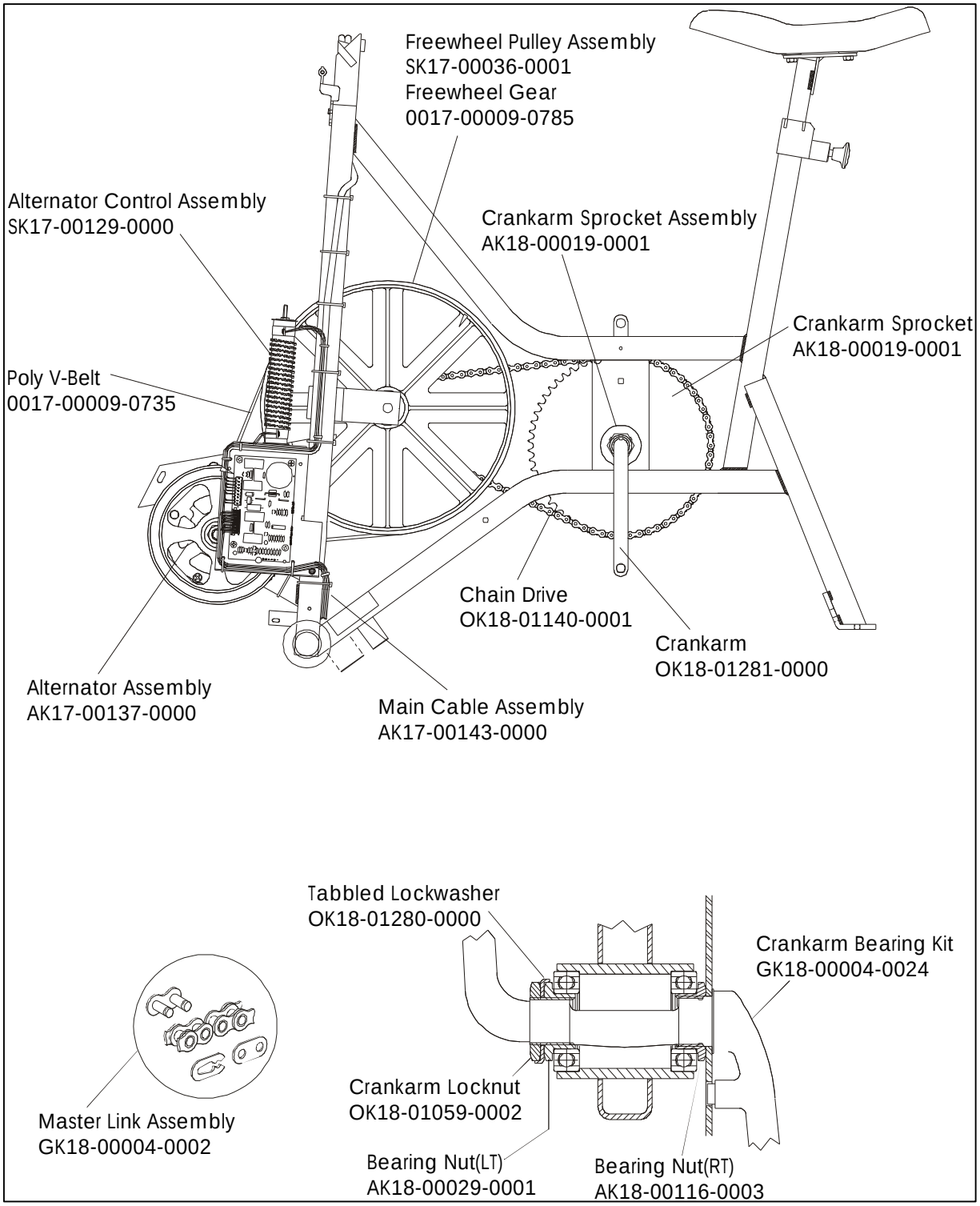
Freewheel Pulley Assembly
SK17-00036-0001
Freewheel Gear
0017-00009-0785
Alternator Control Assembly
SK17-00129-0000
Crankarm Sprocket Assembly
AK18-00019-0001
Crankarm Sprocket
AK18-00019-0001
Poly V-Belt
0017-00009-0735
Chain Drive
OK18-01140-0001
Crankarm
OK18-01281-0000
Alternator Assembly
AK17-00137-0000
Main Cable Assembly
AK17-00143-0000
Tabbled Lockwasher
OK18-01280-0000
Crankarm Bearing Kit
GK18-00004-0024
Crankarm Locknut
OK18-01059-0002
Master Link Assembly
GK18-00004-0002
Bearing Nut(LT)
AK18-00029-0001
Bearing Nut(RT)
AK18-00116-0003