TR-7500
TREADMILL

GK26-00010-XXXX

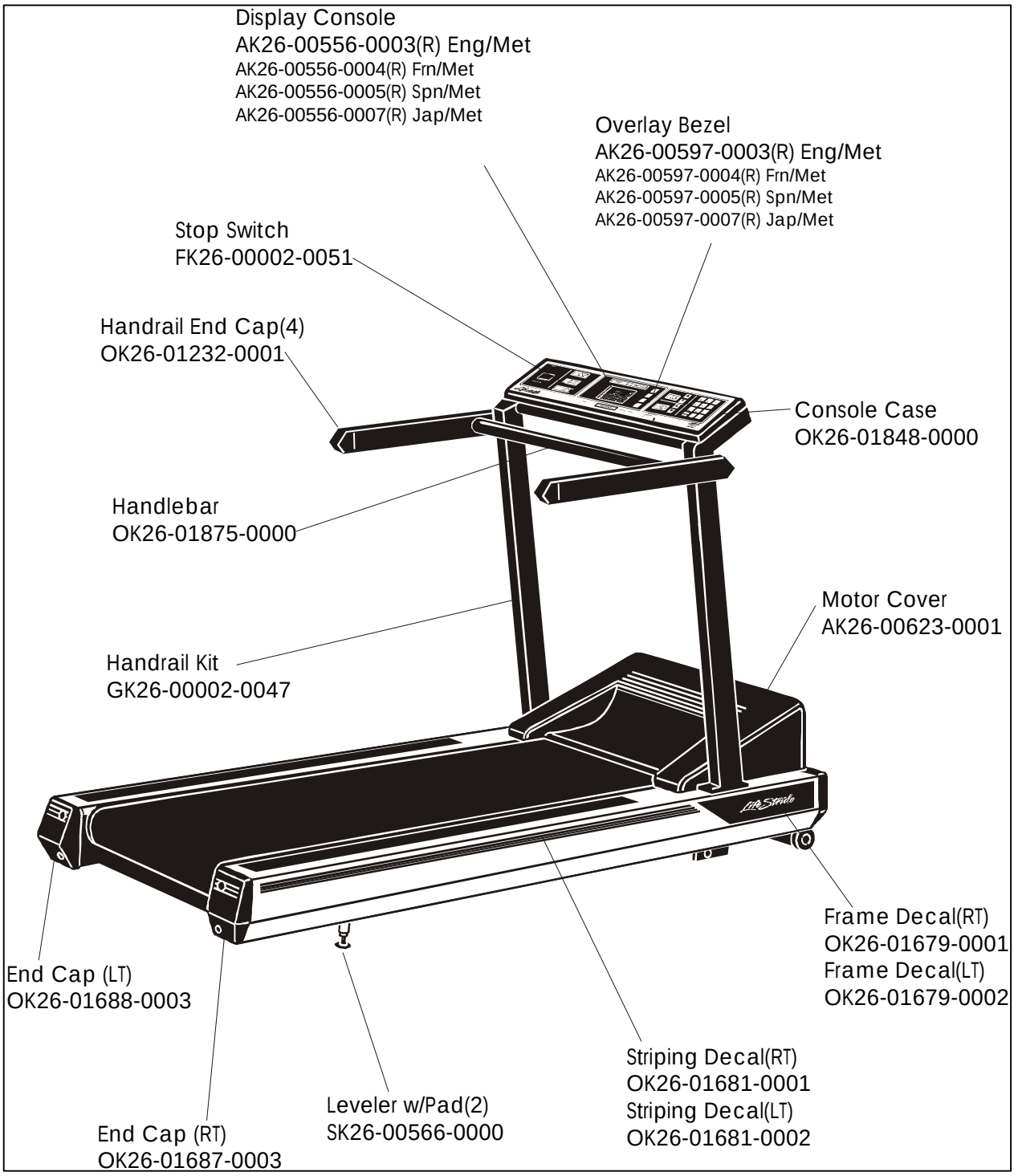

Revision Date: 11/6/98

TR-7500
TREADMILL

GK26-00010-XXXX

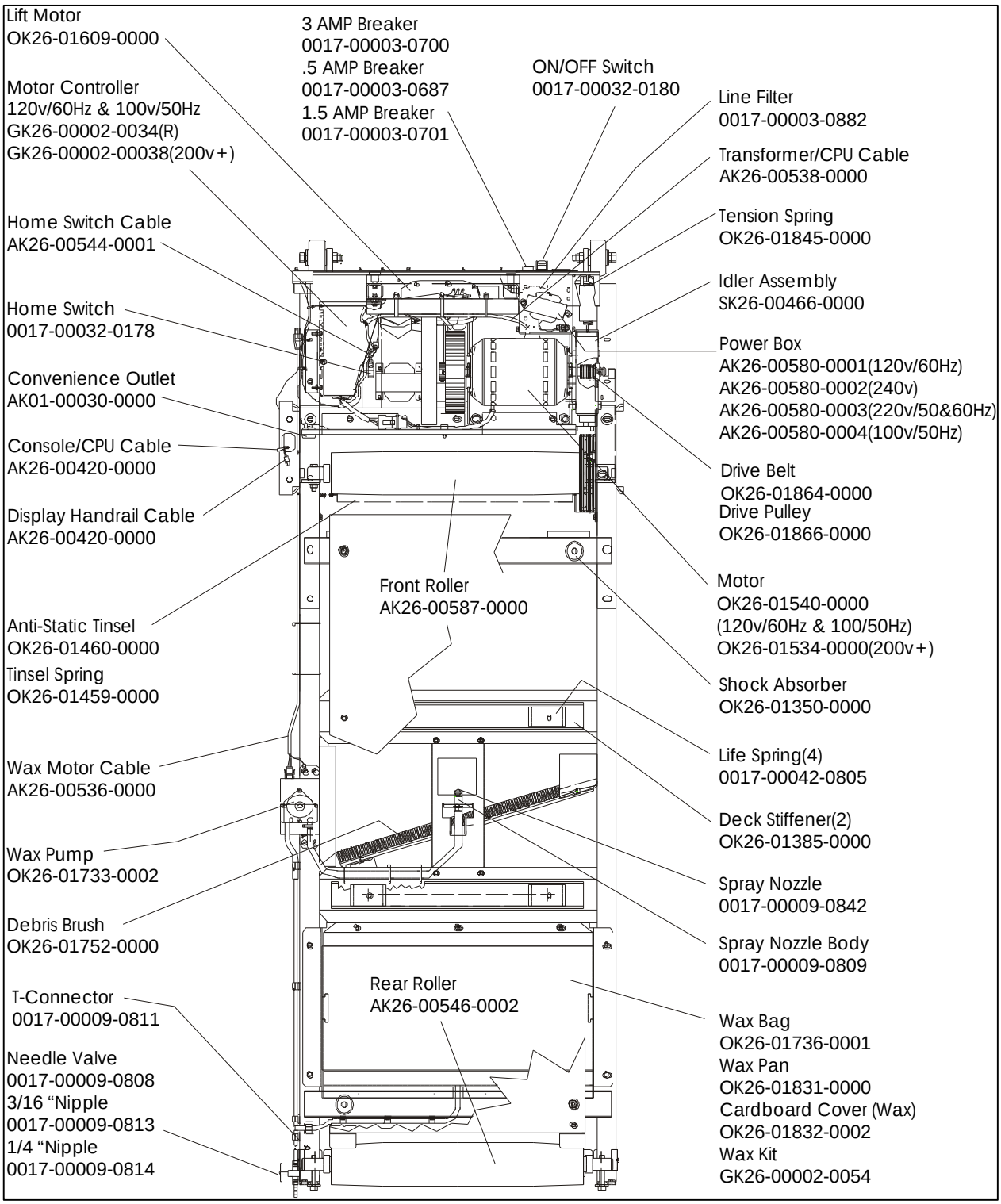

Revision Date: 11/6/98

TR-7500
TREADMILL

GK26-00010-XXXX

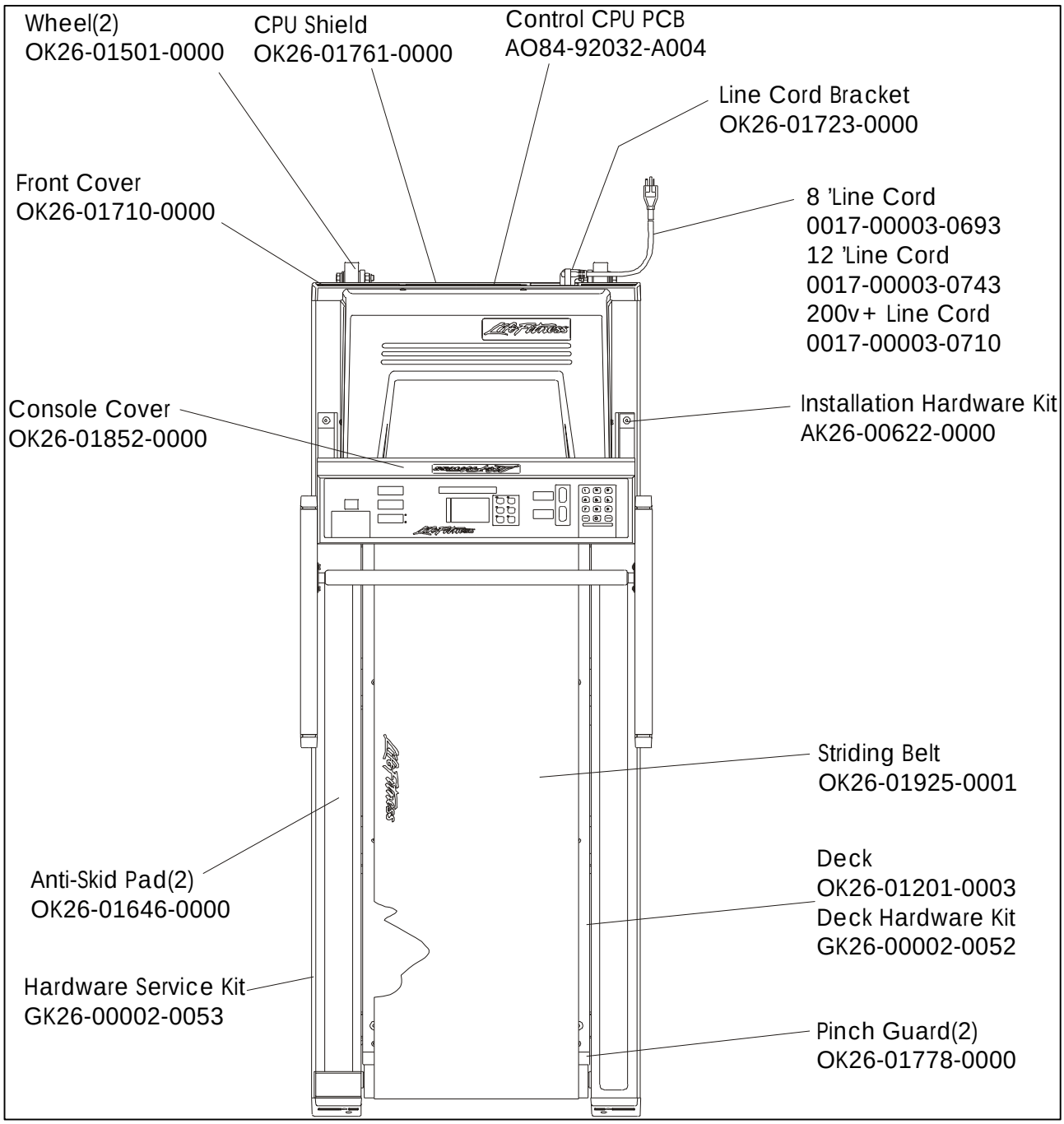

Revision Date: 11/6/98