TR-9100HRF
TREADMILL

GK26-00024-XXXX

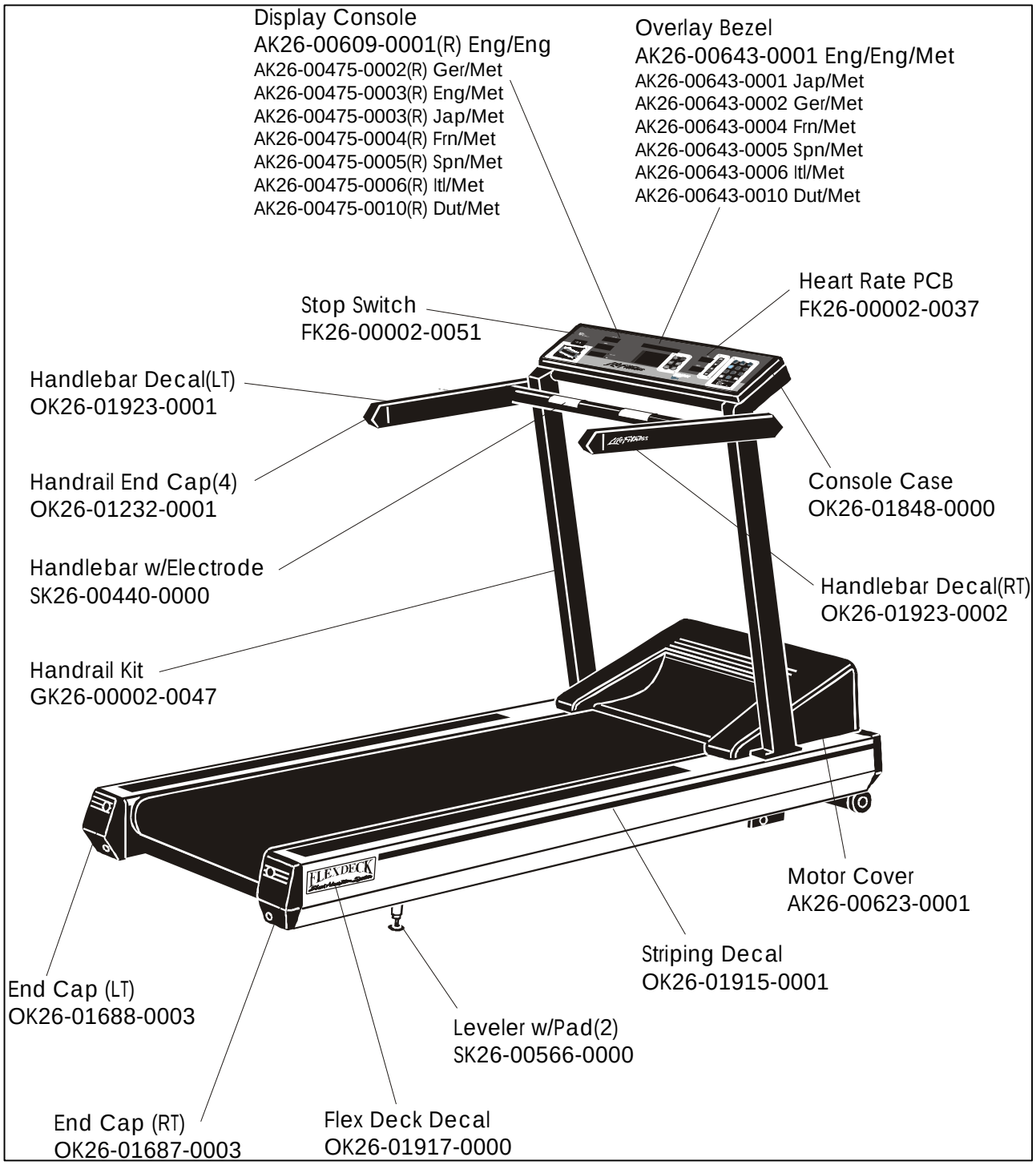

Revision Date: 11/9/98

TR-9100HRF TREADMILL

GK26-00024-XXXX

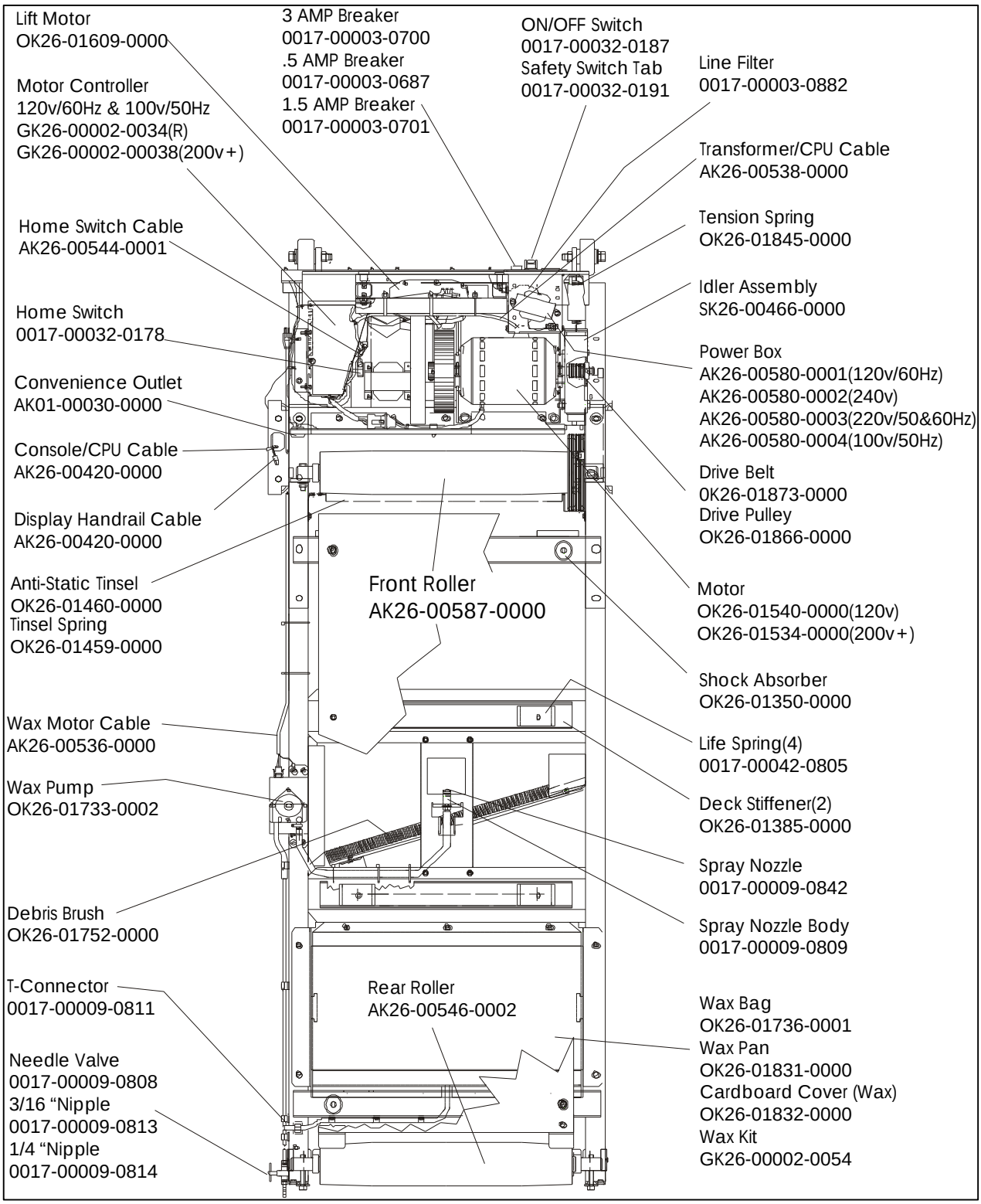

Revision Date: 11/9/98

TR-9100HRF
TREADMILL

GK26-00024-XXXX

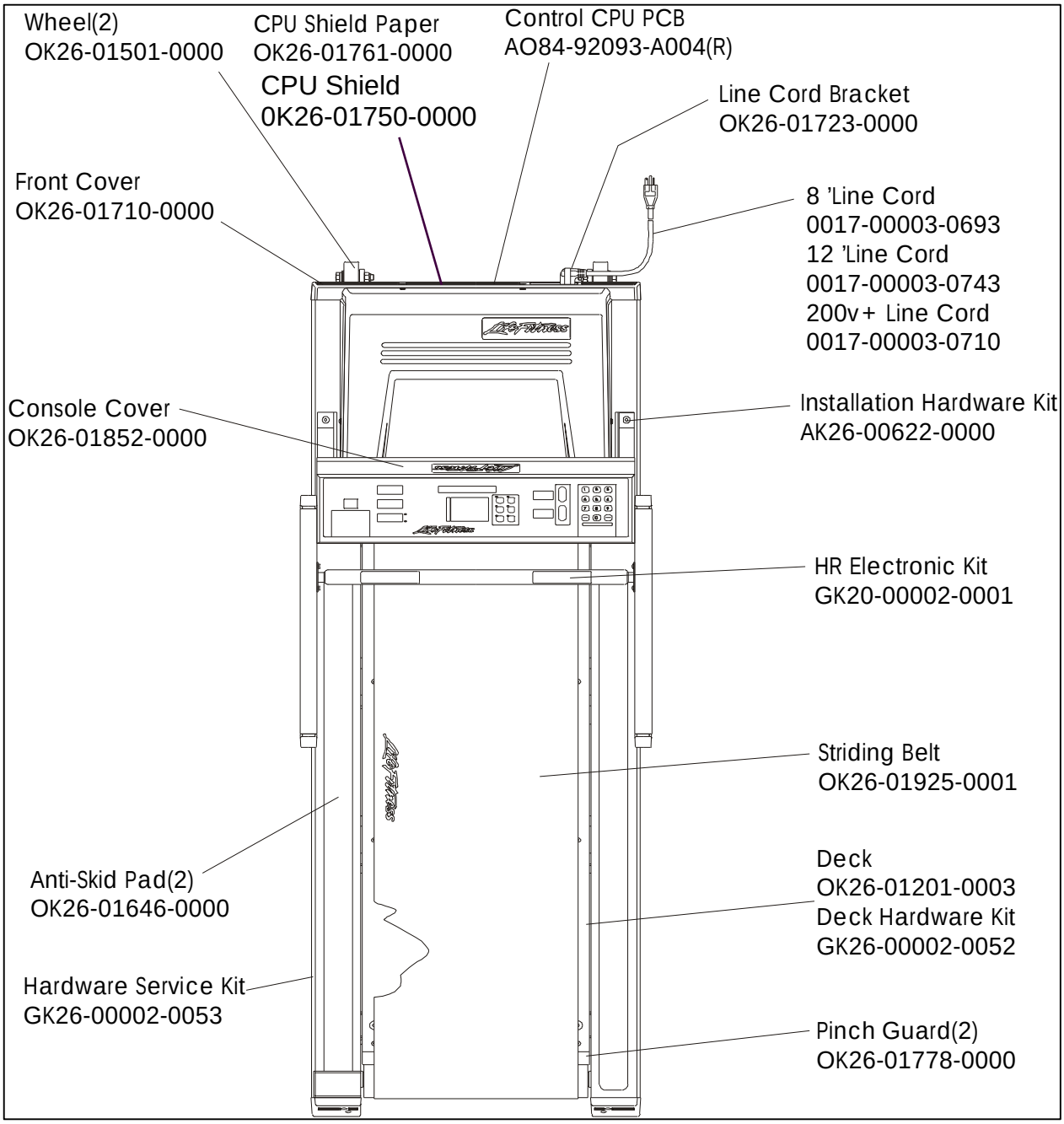

Revision Date: 11/9/98