LC-9500R(CE)
EXERCISE BIKE

GK19-00018-XXXX

Revision Date: 8/12/98

LC-9500R(CE) EXERCISE BIKE

GK19-00018-XXXX

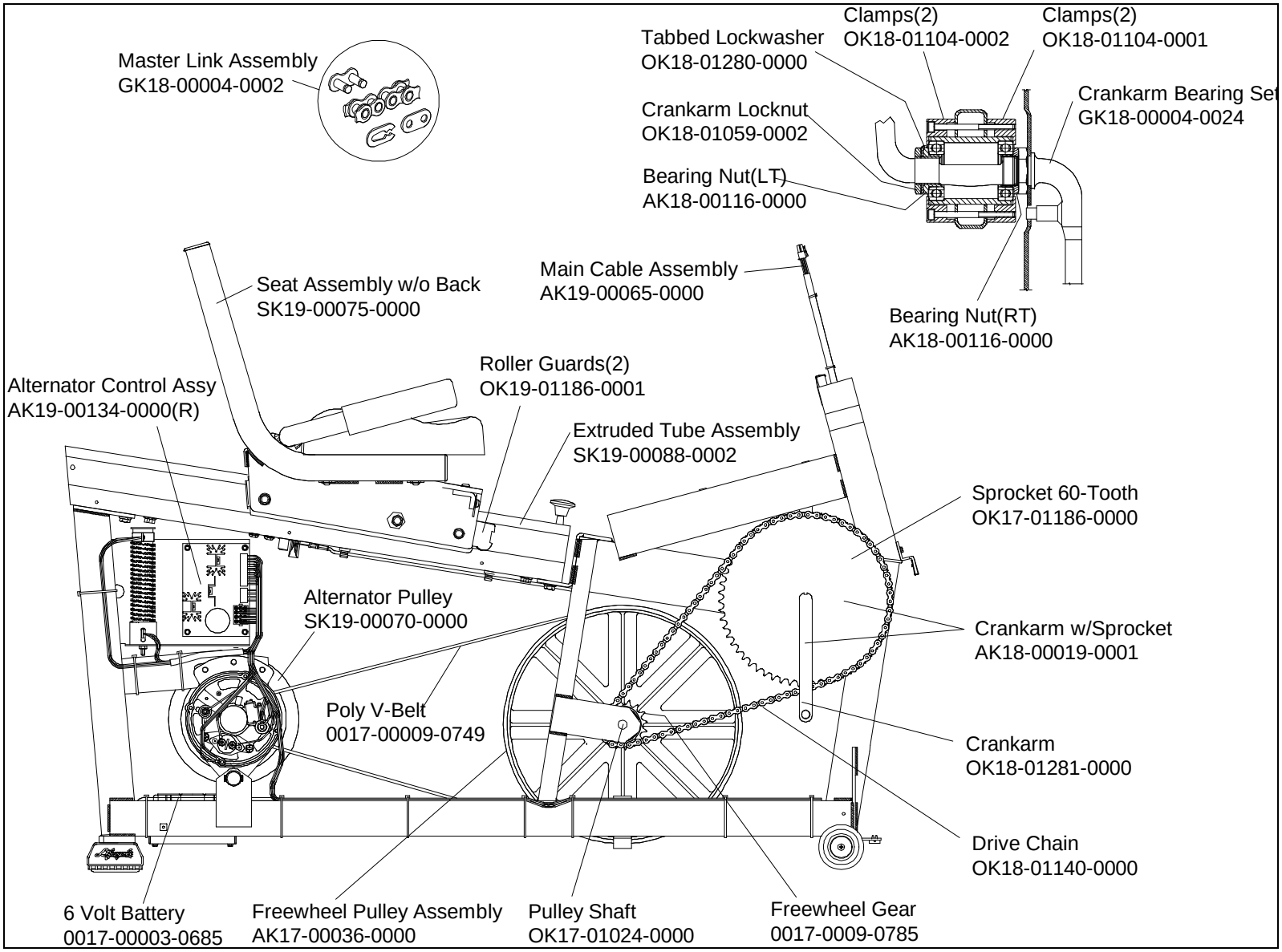

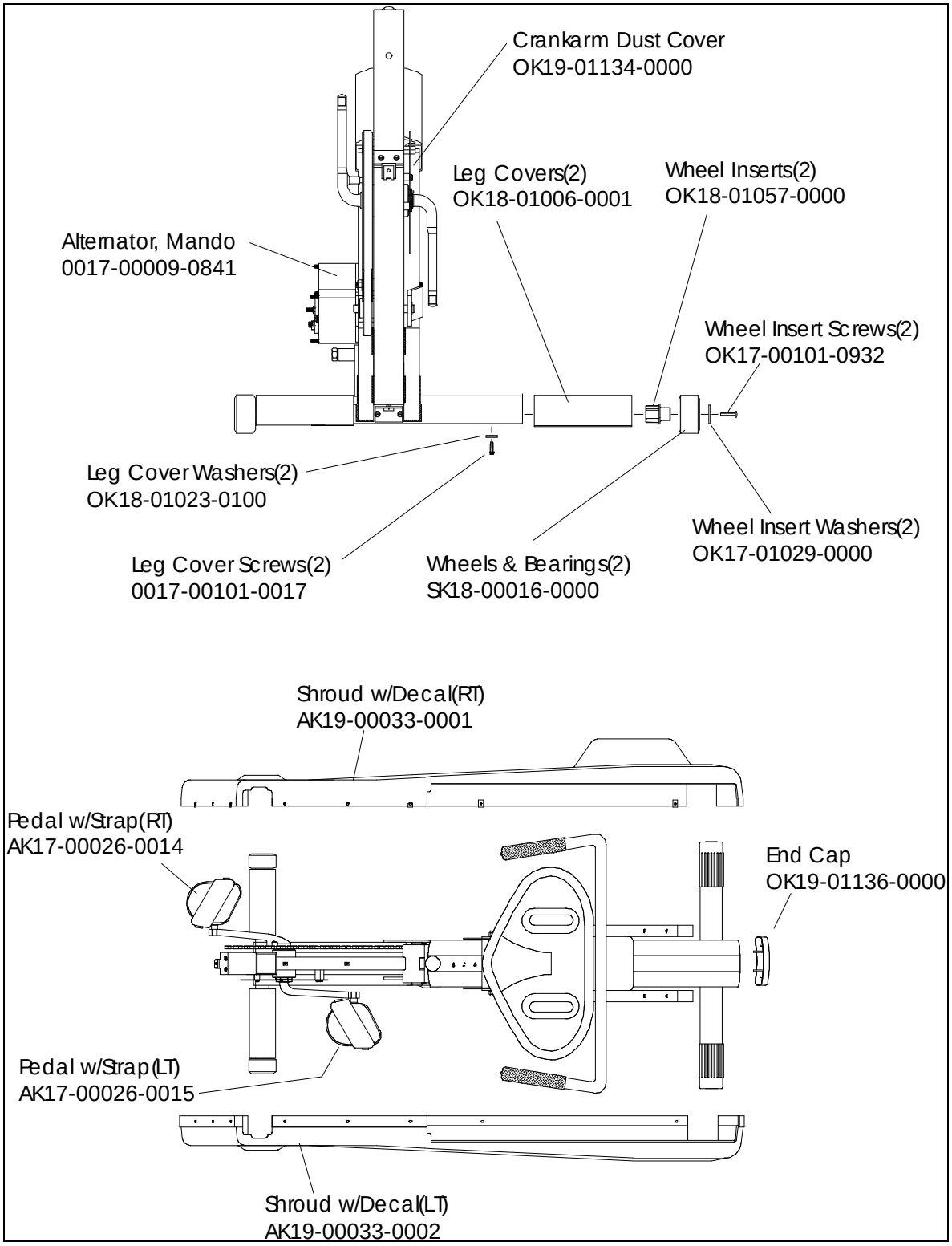
Crankarm Dust Cover
OK19-01134-0000
Leg Covers(2)
OK18-01006-0001
Wheel Inserts(2)
OK18-01057-0000
Alternator, Mando
0017-00009-0841
Wheel Insert Screws(2)
OK17-00101-0932
Leg Cover Washers(2)
OK18-01023-0100
Wheel Insert Washers(2)
OK17-01029-0000
Leg Cover Screws(2)
0017-00101-0017
Wheels & Bearings(2)
SK18-00016-0000
Shroud w/Decal(RT)
AK19-00033-0001
Pedal w/Strap(RT)
AK17-00026-0014
End Cap
OK19-01136-0000
Pedal w/Strap(LT)
AK17-00026-0015
Shroud w/Decal(LT)
AK19-00033-0002