LC-9500HR
EXERCISE BIKE

GK46-00007-XXXX

SN: 212727-UP

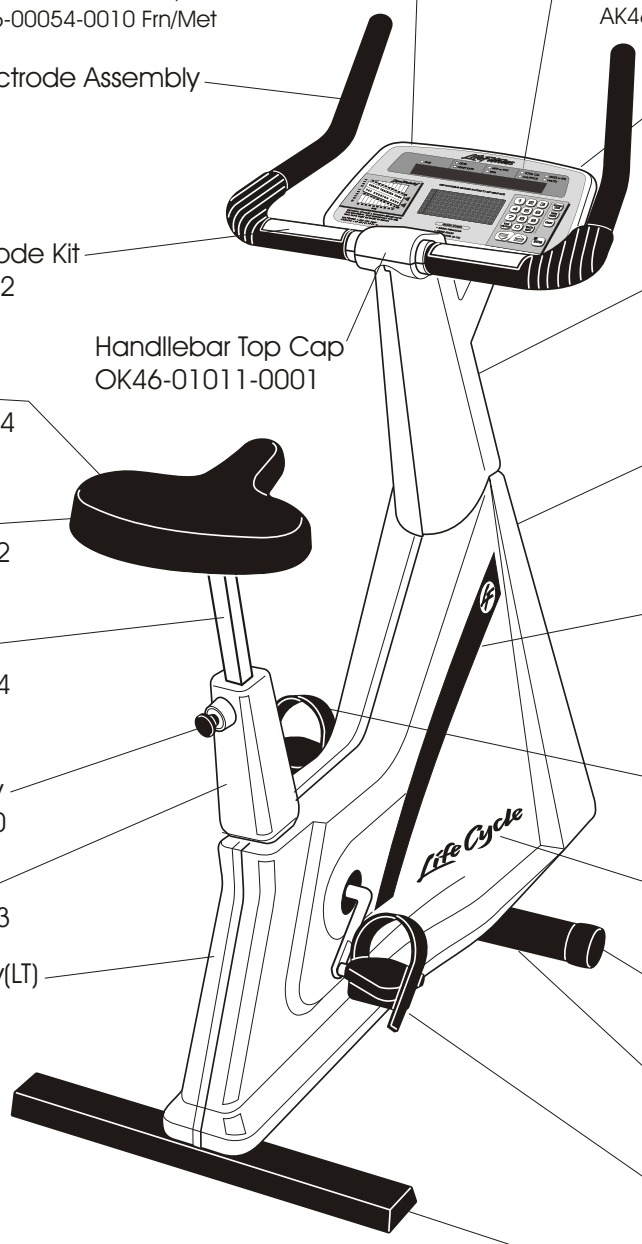

Console Assembly
AK46-00054-0001 Eng/Met
AK46-00054-0002 Eng/Eur
AK46-00054-0003 Ger/Eur
AK46-00054-0006 Jap/Met
AK46-00054-0007 Frn/Eur
AK46-00054-0004 Spn/Eur
AK46-00054-0005 Itl/Met
AK46-00054-0008 Itl/Eur
AK46-00054-0009 Dut/Eur
AK46-00054-0010 Frn/Met

Overlay Bezel
AK46-00047-0001 Eng/Met
AK46-00047-0001 Eng/Met
AK46-00047-0003 Ger/Met
AK46-00047-0006 Jap/Met
AK46-00047-0007 Frn/Met
AK46-00047-0004 Spn/Eur
AK46-00047-0004 Itl/Met
AK46-00047-0008 Itl/Eur
AK46-00047-0009 Dut/Eur
AK46-00047-0007 Frn/Met

Handlebars w/Electrode Assembly
SK46-00013-0001

Console Case
OK36-01034-0005

Heart Rate Electrode Kit
GK20-00002-0002

Handlebar Neck Shroud (RT)
AK46-00046-0001
Handlebar Neck Shroud(LT)
AK46-00046-0002

Handllebar Top Cap
OK46-01011-0001

Seat
OK18-01265-0004

Shroud Assembly(RT)
AK46-00044-0001
Shroud Screws
0017-00101-1148

Seat w/Seatpost
AK18-00127-0002

Shroud Decal Accent(RT)
OK46-01050-0001
Shroud Decal Accent(LT)
OK46-01050-0002

Seatpost
AK18-00156-0004

Pedal w/Strap(LT)
AK17-00026-0015

Plunger Assembly
SK18-00136-0000

Seatpost Shroud
AK46-00020-0003

Shroud Logo Decal
OK46-01014-0001

Shroud Assembly(LT)
AK46-00044-2

Wheel/Bearings(2)
SK18-00016-0000

Leg Covers (2)
OK18-01006-0000

Pedal w/Strap(RT)
AK17-00026-0014

Stabilizer Bar
SK18-00070-0000

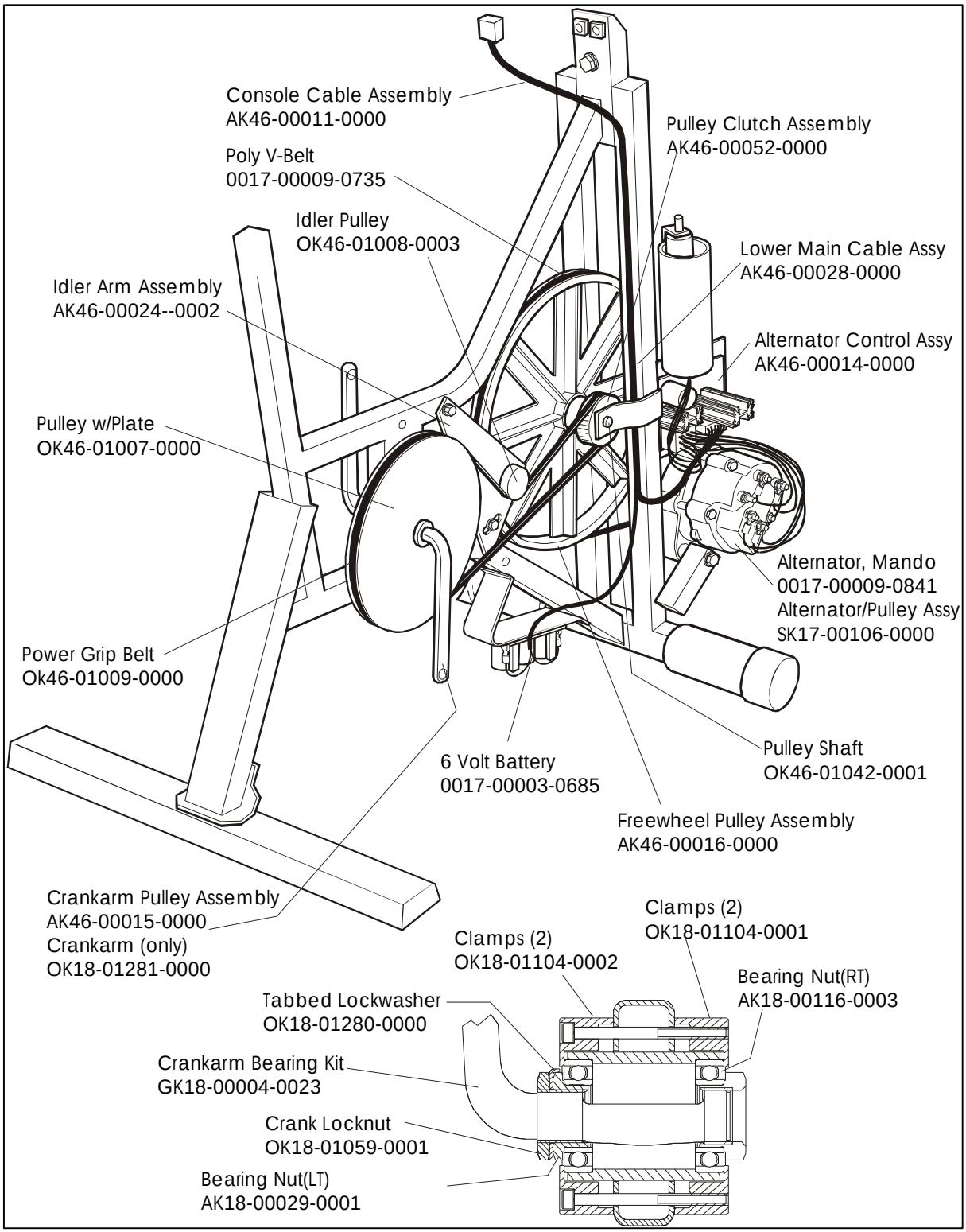
Console Cable Assembly
AK46-00011-0000
Poly V-Belt
0017-00009-0735
Idler Pulley
OK46-01008-0003
Idler Arm Assembly
AK46-00024--0002
Pulley w/Plate
OK46-01007-0000
Power Grip Belt
Ok46-01009-0000
Pulley Clutch Assembly
AK46-00052-0000
Lower Main Cable Assy
AK46-00028-0000
Alternator Control Assy
AK46-00014-0000
Alternator, Mando
0017-00009-0841
Alternator/Pulley Assy
SK17-00106-0000
Pulley Shaft
OK46-01042-0001
6 Volt Battery
0017-00003-0685
Freewheel Pulley Assembly
AK46-00016-0000
Crankarm Pulley Assembly
AK46-00015-0000
Crankarm (only)
OK18-01281-0000
Clamps (2)
OK18-01104-0002
Clamps (2)
OK18-01104-0001
Bearing Nut(RT)
AK18-00116-0003
Tabbed Lockwasher
OK18-01280-0000
Crankarm Bearing Kit
GK18-00004-0023
Crank Locknut
OK18-01059-0001
Bearing Nut(LT)
AK18-00029-0001