TR4000 Treadmill

GK40-00012-XXXX

S/N 561990-562014, 562015-UP

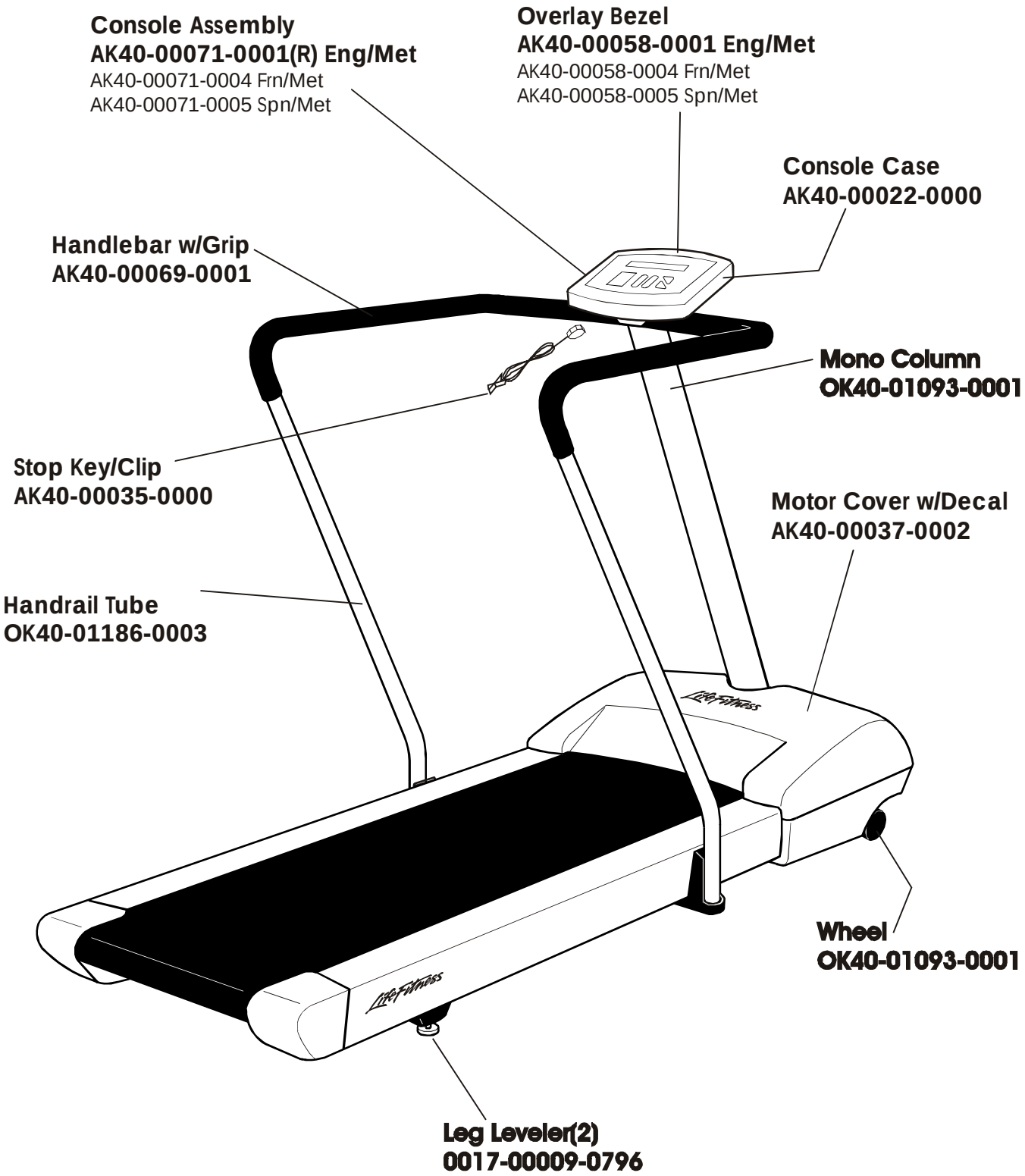

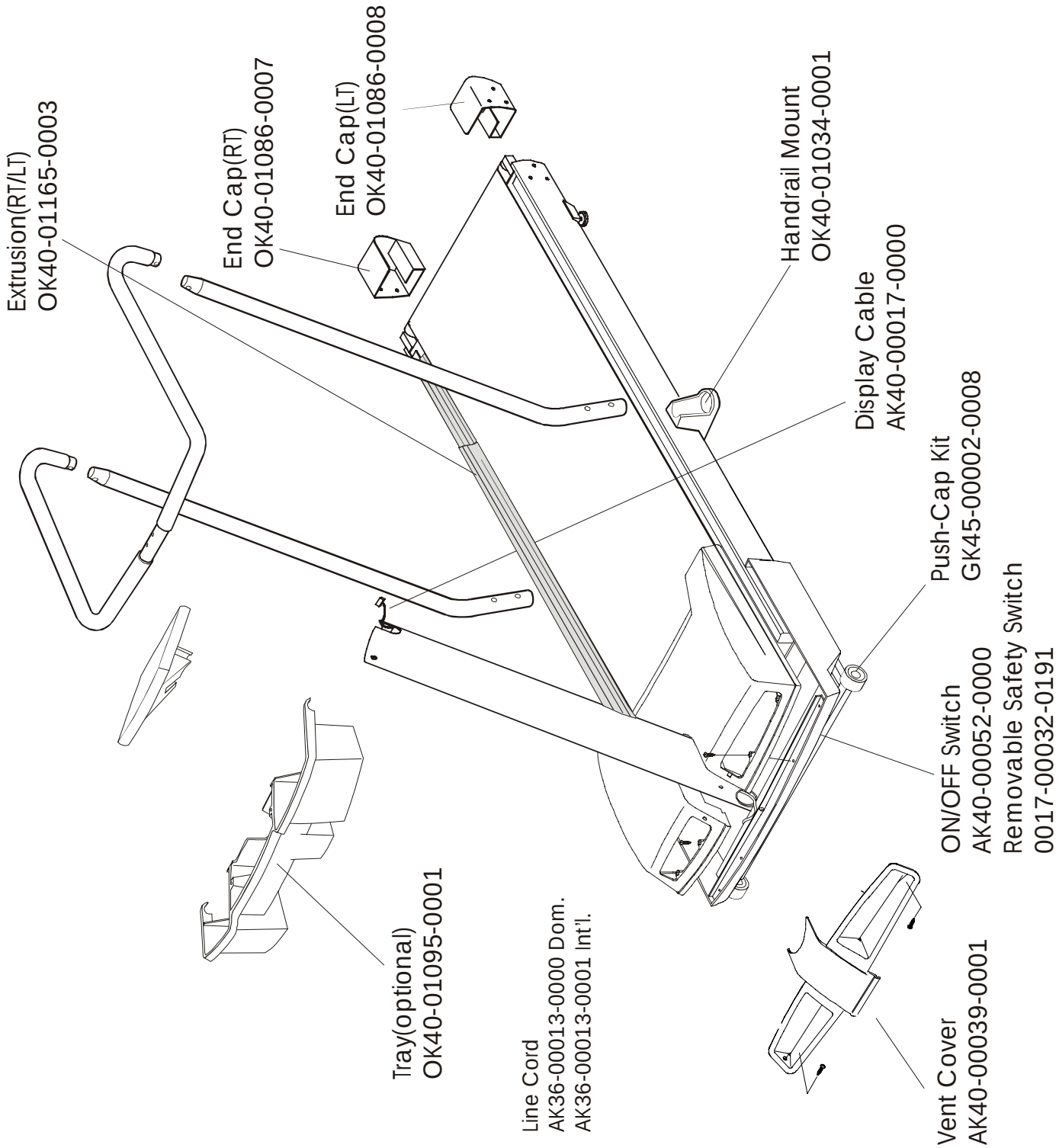
Extrusion(RT/LT)
OK40-01165-0003
End Cap(RT)
OK40-01086-0007
End Cap(LT)
OK40-01086-0008
Handrail Mount
OK40-01034-0001
Display Cable
AK40-00017-0000
Push-Cap Kit
GK45-00002-0008
ON/OFF Switch
AK40-00052-0000
Removable Safety Switch
0017-00032-0191
Vent Cover
AK40-00039-0001
Line Cord
AK36-00013-0000 Dom.
AK36-00013-0001 Int'l.
Tray(optional)
OK40-01095-0001

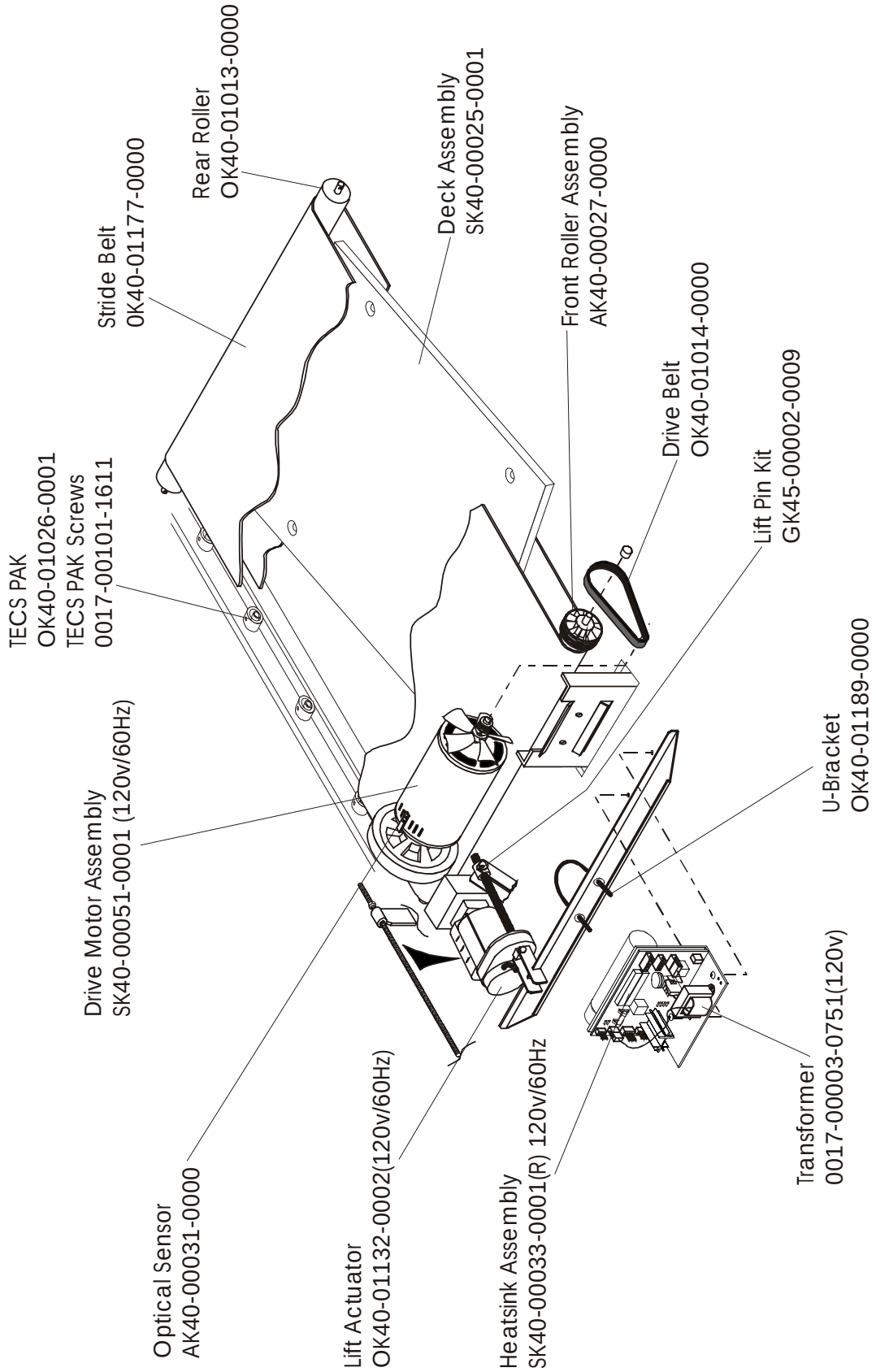
Stride Belt
OK40-01177-0000
Rear Roller
OK40-01013-0000
Deck Assembly
SK40-00025-0001
Front Roller Assembly
AK40-00027-0000
Drive Belt
OK40-01014-0000
Lift Pin Kit
GK45-00002-0009
TECS PAK
OK40-01026-0001
TECS PAK Screws
0017-00101-1611
Drive Motor Assembly
SK40-00051-0001 (120v/60Hz)
U-Bracket
OK40-01189-0000
Optical Sensor
AK40-00031-0000
Lift Actuator
OK40-01132-0002(120v/60Hz)
Heatsink Assembly
SK40-00033-0001(R) 120v/60Hz
Transformer
0017-00003-0751(120v)